BURGUNDY 29 0.750



KMC
GLASS

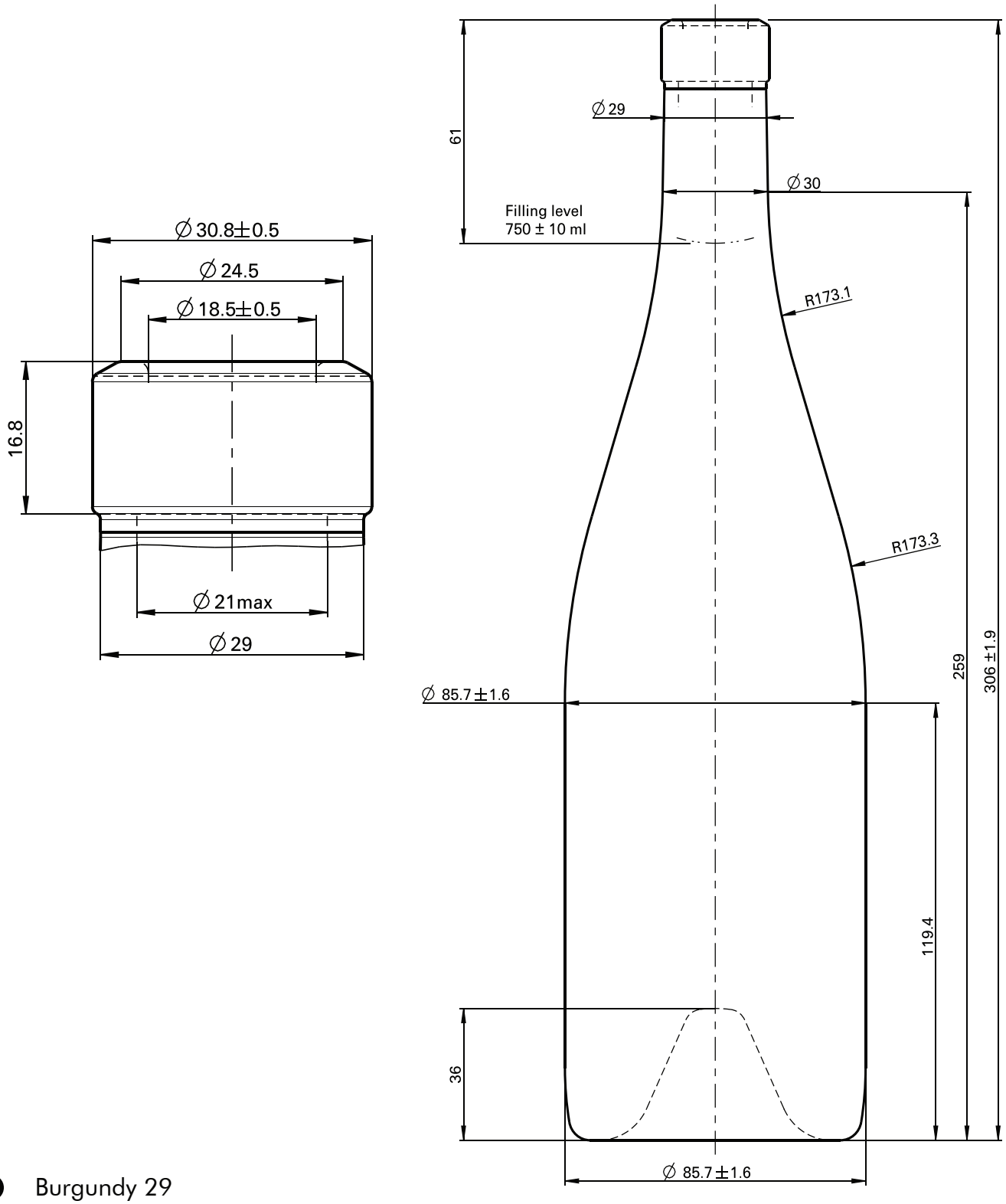

- Burgundy 29
- Filling CAP - 750±10 ml
- Weight - ~810 g
- Height - 306±1.9 mm
- Diameter - 85.7±1.6 mm
- Entrance Bore Diameter - 18.5±0.5 mm
- Color - Olive Green, Flint

www.kmc.glass
sales@kmc.glass

KMC GLASS